No.	ITEM#	DESCRIPTION	QTY.	NOTES
1	SPNA17HFRON16900E3	PLUG (17 POLES)	1	Interconnectron
2	10120-3000VE	CONNECTOR	1	3M
3	10320-52A0-008	HOOD	1	3M
4	T/20276-SB	CABLE, 22AWG x 2C,24AWGx2P, SHILEDED	-	Taiyo

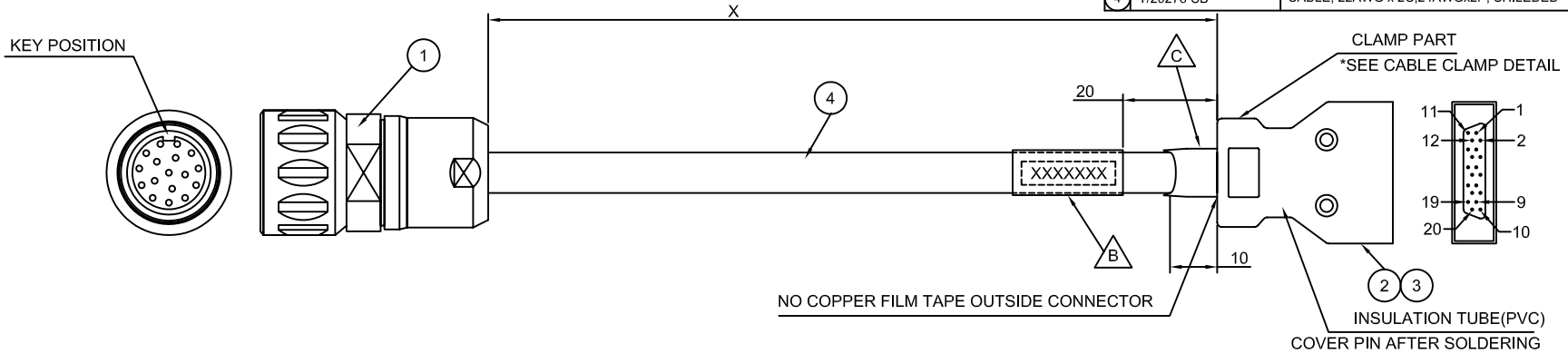

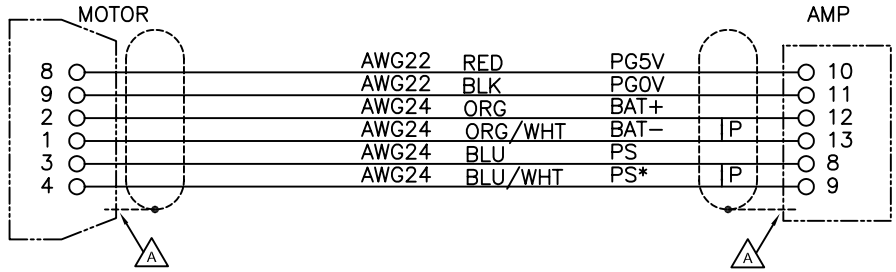

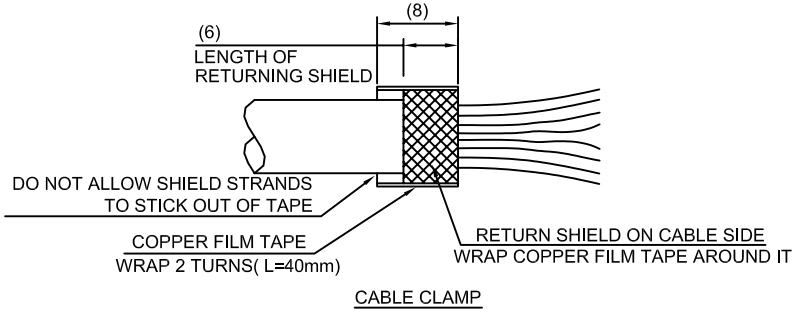

NOTES:

A CONNECT SHIELD TO CONNECTOR SHELL

B YASKAWA INFORMATION LABEL :

YASKAWA
"ITEM NUMBER" ("REV")
"VENDOR CODE" "MM/YY"

C ADD APPROPRIATE HEAT SHRINK TUBE, USE GROMET IF NEEDED

D USING AUTOMATED OR MANUAL CABLE TESTER, VERIFY ALL CONNECTIONS, AND VERIFY THAT EACH WIRE OR TERMINATION IS NOT SHORTED TO ANY OTHER WIRE OR TERMINATION UNLESS INTENDED TO BE ELECTRICALLY CONNECTED. ALL WIRES OR TERMINATIONS SHALL BE ISOLATED FROM ALL OTHER WIRES OR TERMINATIONS BY A MINIMUM OF 10 MEGOHM AT 500VDC. RECORDS OF TEST MUST BE MAINTAINED AND PROVIDED UPON REQUEST.

E CONDUCT HI-POT TEST AT 600 VAC FOR 1 SECOND.
(NOTE: LEAK CURRENT = 20 mA)

ITEM NUMBER	X=LENGTH
AFPHCE−03(A)	3 METERS
AFPHCE−05(A)	5 METERS
AFPHCE−10(A)	10 METERS
AFPHCE−15(A)	15 METERS
AFPHCE−20(A)	20 METERS

CABLE SPECIFICATION (mm)	
OUTER DIAMETER	6.5
BENDING RADIUS	N/A
STANDARD	UL/CE
UL/IP CLASSIFICATION	
CONNECTOR (1)	IP67
CONNECTOR (2)	UL94V-0

0 INITIAL RELEASE			EAR 2006-016

DESIGN: -	-	MATERIAL: SEE PART LIST ABOVE	YASKAWA Energy In Motion™
DRWN: D.GREULOCH	4/10/06	SPEC: SEE PART LIST ABOVE	
CHKD: N.HOUCK	5/1/06	FINISH: N/A	
TECH: -	-	TOLERANCES/REFERENCES: UES000002	TITLE: SGMPH Encoder Cable for FSP
APRV: C.KINTNER	5/2/06		
THIS DOCUMENT AND INFORMATION CONTAINED IN IT ARE CONFIDENTIAL, AND CANNOT BE COPIED OR DISCLOSED IN WHOLE OR IN PART WITHOUT THE EXPRESS WRITTEN CONSENT OF YASKAWA ELECTRIC AMERICA INC.		MODEL(S): SGMPH	DWG: UWR00652
		REF DWG: A1ICE-XX(A)	
		DIMENSIONS: mm / SCALE: NTS	ITEM #: *SEE CHART
		SIZE: B / SHEET: 1/1	